GAZCO

RIVA2

GAS FIRES

2020
WINNER
Best Heating & Plumbing Supplier
Homebuilding & Renovating Awards

Everyone is Different

This is why we created such a wide and diverse range of Riva2 gas fires, with so many possibilities. Whether you prefer contemporary or traditional styles, small or large fires, or live in a home with or without a chimney, you can personalise your Riva2 fire to suit your tastes and requirements.

Riva2 600HL Edge with EchoFlame Black Glass lining.
***Cover image**: Riva2 600 Icon XS with EchoFlame Black Glass lining*

Contents

Riva2 Fires 06
Size Options 07
Frame & Surround Options 08
Lining Options 10

Riva2 400 12
Riva2 500 18
Riva2 500HL Slimline 24
Riva2 600 28
Riva2 600HL 34
Riva2 750HL 40

Riva2 Stone Mantels 46
Reflex & Studio Fires 54
Electric Fires 56
Flue Options 58
Summary of Options 60
Technical Information 62

GAZCO

2020 WINNER Best Heating & Plumbing Supplier Homebuilding & Renovating Awards

WIN the cost of your product back!

by registering your product online for your free extended warranty. See page 69 for more details.

Relax - it's a Gazco Fire...

When you choose Gazco, quality and innovative technology are assured. From traditional models to contemporary designs, Gazco is committed to creating the ultimate flame-effect gas and electric fires.

Our research and development laboratories are amongst the most advanced in the world, ensuring that the very latest innovations are incorporated into our appliances.

Gazco is an ISO9001 and ISO14001 accredited company. Our rigorous quality control system ensures that all our appliances are safety checked and that they comply with the appropriate regulations, with all fires in this brochure bearing the CE mark. Similarly, our environmental management systems ensure we work in a sustainable manner, whilst endeavouring to protect the environment by minimising any possible impact from our operations.

Over Three Decades of British Design and Engineering

Warranty

Your Gazco Expert Retailer will provide you with a Two Year Warranty for your new gas fire. This can be extended to a Five Year Warranty by registering your fire with Gazco. Please note, these warranties exclude certain consumable parts. Fires purchased outside of Gazco's Expert Retailer Network will carry a standard 1 Year non-extendable Warranty. Full warranty terms and conditions are available to view at **www.gazco.com.**

5 YEAR EXTENDED WARRANTY

Expert Retailer Network

We take great care to ensure that our fires are designed, tested and manufactured to the highest possible quality and safety standards.

We are equally careful to make certain they are sold and installed correctly so you can enjoy years of pleasure from your fire. Our products are only available from experienced, independent retailers who will be happy to show you a selection of models locally in their showrooms, often fully operational. These independent retailers will discuss your individual requirements both technical (such as sizing the heat output to your room and advising on your flue type) and design, and ensure that you select the most appropriate product for your home.

Our experienced retailers will also be able to advise on, or assist with, the installation process as well as help provide any after-sales support and servicing your appliance may require in the future.

Whilst we encourage our retailers to promote fireplace products and their outlets via the internet, we do not believe suitable levels of customer care and satisfaction can be obtained from purchasing the product only online and we would strongly recommend that you consider this when undertaking your research and making a purchasing decision. Furthermore, please be aware that we do not offer technical support (beyond our statutory responsibilities) to products bought via nationwide online sales, where this support would normally be offered by one of our qualified, independent retailers.

Find Your Retailer

Find your nearest retailer by visiting: **www.gazco.com/find-a-retailer**

Riva2 500 Evoke Glass with White Glass front and Vermiculite lining

Riva2 Fires

Whichever model you decide upon, you can rest assured each fire has been designed in our world-class UK laboratories. Our state-of-the-art technology ensures all Riva2 fires provide high efficiency heating and superb, natural flames at the touch of a button.

Riva2 600 Designio2 Steel in Graphite with Ledgestone-effect lining.

Size Options

400

The most compact fire in the Riva2 range, the conventional flue 400 is perfect for standard sized homes with 16" fireplaces and provides 3.8kW of heat at up to 81% efficiency.

Size (wxh):
400 x 388mm*

500

Superbly versatile, the Riva2 500 is designed to suit a variety of interiors. This mid-sized fire is available in conventional or balanced flue options and provides up to 4.9kW of high efficiency heat.

Size (wxh):
550 x 388mm*

500HL Slimline

Designed to be installed in homes without a chimney, the slim depth of the balanced flue Riva2 500HL Slimline allows some of the fire's depth to be housed in a cavity wall. The remaining 75mm depth can be housed in your choice of surround - such as the stylish Esprit (page 24) or a shallow stud-work faux chimney breast.

Size (wxh):
549 x 521mm*

600

The Riva2 600 offers magnificent flame visuals and a versatile, landscape form-factor. Bringing impeccable styling to any interior, this conventional flue fire is suitable for a variety of homes. Opt for a minimalist Edge fire or choose one of the stylish glass or steel frame options for added presence.

Size (wxh):
594 x 370mm*

600HL

The highly adaptable conventional flue 600HL works equally well in both modern or traditional interiors, thanks to its versatile proportions, which suit standard 22" chimney openings. Whether styled as a contemporary fire or as a magnificent fireplace when coupled with one of Gazco's period stone mantels, you can customise the 600HL to suit your home.

Size (wxh):
600 x 600mm*

750HL

One of the most impressive fires in the Riva2 family, the 750HL provides up to 7kW of high efficiency heat, making it ideal for heating larger spaces. Designed to fit into a standard 36" chimney opening, the Riva2 750HL allows you to make the most of your existing fireplace, with a balanced flue version for homes without a chimney.

Size (wxh):
797 x 713mm*

* Sizes given are those visible upon installation when installed as a frameless Edge fire.

Complete Control

The Riva2 range features a powerful Programmable Thermostatic remote control, which lets you ignite your fire and adjust the flames from the comfort of your armchair. Riva2 fires can also be pre-set to maintain selected temperatures as well as scheduled to turn on at certain times.

Non-reflective Glass

Many fires in the Riva2 range feature crystal clear non-reflective glass for breath-taking visuals uninterrupted by unwanted reflections. See page 61 for individual fire features.

Frame & Surround Options

There are a wealth of frame choices available to perfectly complement your Riva2 fire, outlined on these pages and shown in detail throughout the brochure. Each one of these frames offers a unique styling possibility and is crafted from the very finest materials.

Whether your tastes lie with the contemporary or the traditional, you can find a Riva2 frame to suit your interior. Options include a stunning frameless 'hole in the wall' look, sleek glass and steel finishes, striking colour options and a wealth of hand-crafted stone mantels; ensuring whatever your style preference, there is a Riva2 fire for you.

Frame	Riva2 400	Riva2 500	Riva2 500HL Slimline	Riva2 600	Riva2 600HL	Riva2 750HL
Edge	✓	✓	✓	✓	✓	✓
Icon XS	✓	✓	✓	✓	✓	✓
Ellingham	✗	✓	✗	✗	✗	✗
Verve XS	✓	✓	✓	✓	✓	✓
Evoke Steel	✗	✓	✗	✗	✗	✓
Evoke Glass	✗	✓	✗	✗	✗	✓
Evoke XS	✓	✗	✗	✗	✓	✗
Designio2 Steel	✗	✗	✗	✓‡	✗	✗
Designio2 Glass	✗	✗	✗	✓	✗	✗
Esprit	✗	✗	✓	✗	✗	✗
Stone Mantels	✗	✓*	✓*	✓*	✓*	✓*

*Requires additional slip sets or back panels. The Riva2 600HL and 750HL slip sets are available from Gazco. Bespoke sourcing will be required for other fires.

‡ Graphite finish only

Stone Mantels - see pages 46 - 53

Selected Riva2 400, 500, 500HL Slimline, 600, 600HL & 750HL are versatile fires that can be installed into both contemporary and more traditional interiors. Gazco's collection of six high quality stone mantels and hearths, with additional slip sets or backing panels, will complement these fires to ensure a grand finish and a timeless fireplace for your home.

Edge (Frameless)

Icon XS

Black Glass

Designio2 Glass

Black Glass

Verve XS

Graphite

Esprit

Graphite

Evoke XS

Black Glass front and Graphite rear

White Glass front and Graphite rear

Elllingham

Matt Black Cast Iron

Designio2 Steel

Evoke Steel

Graphite

Evoke Glass (Black Glass)

Black Glass front and Graphite rear

Evoke Glass (White Glass)

White Glass front and Graphite rear

Verve XS 400

Verve XS

Verve XS with base section

Verve XS with top and base section

Riva2 750HL Edge with Brick-effect lining in Claremont Limestone mantel with matching slip sets

Lining Options

Riva2 fires can be styled with a variety of lining options, which each transform the fire's look. Choose from modern or traditional backdrops for your fire's flames, with different linings depending on the model.

	Echoflame Black Glass	Black Reeded	Vermiculite	Fluted Vermiculite	Ledgestone-effect	Brick-effect
Riva2 400	✓	✓	✓	✗	✗	✗
Riva2 500	✓	✓	✓	✗	✓	✓
Riva2 500HL Slimline	✓	✓	✓	✗	✗	✗
Riva2 600	✓	✗	✗	✗	✓	✓
Riva2 600HL	✓	✗	✗	✗	✓	✓
Riva2 750HL	✓	✓	✗	✓	✓	✓

Riva2 400 Edge with Vermiculite lining

Riva2 400

Riva2 400 Icon XS with EchoFlame Black Glass lining

	Efficiency & Heat Output			Chimney or Flue Options			Gas Type		Fuel Bed	Linings						Control
	E%† EFFICIENCY	EFFICIENCY CLASS	kW HEAT OUTPUT	BRICK CHIMNEY	PRE-FABRICATED	BALANCED FLUE	NATURAL GAS	LPG GAS	LOGS	BLACK GLASS	BLACK REEDED	VERMICULITE	FLUTED VERMICULITE	LEDGESTONE EFFECT	BRICK EFFECT	PROGRAMMABLE THERMOSTATIC REMOTE
Riva2 400 Conventional Flue	81%	C	3.80kW	✓	✓	✗	✓	✓	✓	✓	✓	✓	✗	✗	✗	✓

† Efficiency and heat output figures are based upon the maximum achieved in the options available. For more detailed technical information, including firebox dimensions and installation requirements, see page 62.

See additional image on page 62

Frame Options

For the complete selection of frames available with Riva2 fires see pages 8 - 9.

Riva2 400

Riva2 400 Evoke XS with White Glass front and EchoFlame Black Glass lining

Riva2 400 Edge with Vermiculite lining.

	Efficiency & Heat Output			Chimney or Flue Options			Gas Type		Fuel Bed	Linings						Control
	E%† EFFICIENCY	EFFICIENCY CLASS	kW HEAT OUTPUT	BRICK CHIMNEY	PRE-FABRICATED	BALANCED FLUE	NATURAL GAS	LPG GAS	LOGS	BLACK GLASS	BLACK REEDED	VERMICULITE	FLUTED VERMICULITE	LEDGESTONE EFFECT	BRICK EFFECT	PROGRAMMABLE THERMOSTATIC REMOTE
Riva2 400 Conventional Flue	81%	C	3.80kW	✓	✓	✗	✓	✓	✓	✓	✓	✓	✗	✗	✗	✓

† Efficiency and heat output figures are based upon the maximum achieved in the options available. For more detailed technical information, including firebox dimensions and installation requirements, see page 62.

Frame Options

For the complete selection of frames available with Riva2 fires see pages 8 - 9.

Riva2 400 Evoke XS with Black Glass front and Black Reeded lining

Riva2 400 Verve XS with top & base sections and EchoFlame Black Glass lining

Riva2 400

Riva2 400 Verve XS with Vermiculite lining

Riva2 400 Verve XS with base section and Black Reeded lining

	Efficiency & Heat Output			Chimney or Flue Options			Gas Type		Fuel Bed	Linings						Control
	E%† EFFICIENCY	EFFICIENCY CLASS	kW HEAT OUTPUT	BRICK CHIMNEY	PRE-FABRICATED	BALANCED FLUE	NATURAL GAS	LPG GAS	LOGS	BLACK GLASS	BLACK REEDED	VERMICULITE	FLUTED VERMICULITE	LEDGESTONE EFFECT	BRICK EFFECT	PROGRAMMABLE THERMOSTATIC REMOTE
Riva2 400 Conventional Flue	81%	C	3.80kW	✓	✓	✗	✓	✓	✓	✓	✓	✓	✗	✗	✗	✓

† Efficiency and heat output figures are based upon the maximum achieved in the options available. For more detailed technical information, including firebox dimensions and installation requirements, see page 62.

Frame Options

For the complete selection of frames available with Riva2 fires see pages 8 - 9.

Riva2 500

Riva2 500 Evoke Steel with with EchoFlame Black Glass lining

Riva2 500 Edge with Black Reeded lining

	Efficiency & Heat Output			Chimney or Flue Options			Gas Type		Fuel Bed	Linings						Control
	E%† EFFICIENCY	EFFICIENCY CLASS	kW HEAT OUTPUT	BRICK CHIMNEY	PRE-FABRICATED	BALANCED FLUE	NATURAL GAS	LPG GAS	LOGS	BLACK GLASS	BLACK REEDED	VERMICULITE	FLUTED VERMICULITE	LEDGESTONE EFFECT	BRICK EFFECT	PROGRAMMABLE THERMOSTATIC REMOTE
Riva2 500 Conventional Flue	76%	D	4.50kW	✓	✓	✗	✓	✓	✓	✓	✓	✓	✗	✓	✓	✓
Riva2 500 Balanced Flue	93.9%	A	4.90kW	✗	✗	✓	✓	✓	✓	✓	✓	✓	✗	✓	✓	✓

† Efficiency and heat output figures are based upon the maximum achieved in the options available. For more detailed technical information, including firebox dimensions and installation requirements, see page 63.

Frame Options

For the complete selection of frames available with Riva2 fires see pages 8 - 9.

See additional images on page 5, 52 & 63.

Riva2 500 Verve XS with Ledgestone-effect lining

Riva2 500 Ellingham with Brick-effect lining

Riva2 500

Riva2 500 Edge with EchoFlame Black Glass lining

	Efficiency & Heat Output			Chimney or Flue Options			Gas Type		Fuel Bed	Linings						Control
	E%† EFFICIENCY	EFFICIENCY CLASS	kW HEAT OUTPUT	BRICK CHIMNEY	PRE-FABRICATED	BALANCED FLUE	NATURAL GAS	LPG GAS	LOGS	BLACK GLASS	BLACK REEDED	VERMICULITE	FLUTED VERMICULITE	LEDGESTONE EFFECT	BRICK EFFECT	PROGRAMMABLE THERMOSTATIC REMOTE
Riva2 500 Conventional Flue	76%	D	4.50kW	✓	✓	✗	✓	✓	✓	✓	✓	✓	✗	✓	✓	✓
Riva2 500 Balanced Flue	93.9%	A	4.90kW	✗	✗	✓	✓	✓	✓	✓	✓	✓	✗	✓	✓	✓

† Efficiency and heat output figures are based upon the maximum achieved in the options available. For more detailed technical information, including firebox dimensions and installation requirements, see page 63.

Frame Options

For the complete selection of frames available with Riva2 fires see pages 8 - 9.

Riva2 500

Riva2 500 Evoke Glass with Black Glass front and EchoFlame Black Glass lining

Riva2 500 Evoke Glass with White Glass front and Brick-effect lining

	Efficiency & Heat Output			Chimney or Flue Options			Gas Type		Fuel Bed	Linings						Control
	E%† EFFICIENCY	EFFICIENCY CLASS	kW HEAT OUTPUT	BRICK CHIMNEY	PRE-FABRICATED	BALANCED FLUE	NATURAL GAS	LPG GAS	LOGS	BLACK GLASS	BLACK REEDED	VERMICULITE	FLUTED VERMICULITE	LEDGESTONE EFFECT	BRICK EFFECT	PROGRAMMABLE THERMOSTATIC REMOTE
Riva2 500 Conventional Flue	76%	D	4.50kW	✓	✓	✗	✓	✓	✓	✓	✓	✓	✗	✓	✓	✓
Riva2 500 Balanced Flue	93.9%	A	4.90kW	✗	✗	✓	✓	✓	✓	✓	✓	✓	✗	✓	✓	✓

Frame Options

For the complete selection of frames available with Riva2 fires see pages 8 - 9.

† Efficiency and heat output figures are based upon the maximum achieved in the options available. For more detailed technical information, including firebox dimensions and installation requirements, see page 63.

Riva2 500 Icon XS with Vermiculite Lining

Riva2 500HL Slimline

The Riva2 500HL Slimline offers you the superb flames of the Riva2 range with a versatile slim profile which allows it to be installed into a cavity wall. Suitable for a huge range of interiors, the 500HL's shallow depth means that it can be conveniently fitted into an exterior wall with the internal leaf removed, ensuring a slim footprint and minimising building work. Once recessed into a cavity wall, this Slimline fire protrudes just 75mm into the room and has a choice of finishing options to suit your interior.

Riva2 500HL Slimline Esprit with EchoFlame Black Glass lining

•WINNER•
Your Home AWARDS
HOMES & INTERIORS HALL OF FAME
BEST HEATING PRODUCT

Winner of
Best Heating Product

HIGH EFFICIENCY

Key Features

1. Choice of frame styles including Espirit surround
2. Large and small sections of Esprit surround can be fitted either above or below fire
3. Shallow firebox depth
4. Balanced flue connection
5. Choice of linings
6. Highly realistic fuel bed
7. Convected heat system outlet
8. Radiant heat
9. Non-reflective glass
10. Programmable Thermostatic remote control*
11. Rear exit Balanced Flue Termination Kit included*

*Not illustrated

Esprit Surround (see left)

An eye-catching alternative to the Edge or frame styling choices, the Esprit adds a surround that houses the Riva2 500HL's remaining 75mm front facing depth once installed into a cavity wall, minimising building work.

Riva2 500HL Slimline Icon XS with Vermiculite lining

	Efficiency & Heat Output			Chimney or Flue Options			Gas Type		Fuel Bed	Linings						Control
	E%† EFFICIENCY	EFFICIENCY CLASS	kW HEAT OUTPUT	BRICK CHIMNEY	PRE-FABRICATED	BALANCED FLUE	NATURAL GAS	LPG GAS	LOGS	BLACK GLASS	BLACK REEDED	VERMICULITE	FLUTED VERMICULITE	LEDGESTONE EFFECT	BRICK EFFECT	PROGRAMMABLE THERMOSTATIC REMOTE
Riva2 500HL Slimline Balanced Flue	86%	B	4.60kW	✗	✗	✓	✓	✓	✓	✓	✓	✓	✗	✗	✗	✓

† Efficiency and heat output figures are based upon the maximum achieved in the options available. For more detailed technical information, including firebox dimensions and installation requirements, see page 64.

Frame Options

For the complete selection of frames available with Riva2 fires see pages 8 - 9.

See additional images on page 48 & 60.

Riva2 500HL Slimline

Riva2 500HL Slimline Esprit with EchoFlame Black Glass lining

Riva2 500HL Slimline Verve XS with Black Reeded lining

	Efficiency & Heat Output			Chimney or Flue Options			Gas Type		Fuel Bed	Linings							Control
	E%† EFFICIENCY	EFFICIENCY CLASS	kW HEAT OUTPUT	BRICK CHIMNEY	PRE-FABRICATED	BALANCED FLUE	NATURAL GAS	LPG GAS	LOGS	BLACK GLASS	BLACK REEDED	VERMICULITE	FLUTED VERMICULITE	LEDGESTONE EFFECT	BRICK EFFECT	PROGRAMMABLE THERMOSTATIC REMOTE
Riva2 500HL Slimline Balanced Flue	86%	B	4.60kW	✗	✗	✓	✓	✓	✓	✓	✓	✓	✗	✗	✗	✓

† Efficiency and heat output figures are based upon the maximum achieved in the options available. For more detailed technical information, including firebox dimensions and installation requirements, see page 64.

Frame Options

For the complete selection of frames available with Riva2 fires see pages 8 - 9.

Riva2 500HL Slimline Edge with Vermiculite lining

Riva2 600

Riva2 600 Icon XS with EchoFlame Black Glass lining

	Efficiency & Heat Output			Chimney or Flue Options			Gas Type		Fuel Bed	Linings						Control
	E%† EFFICIENCY	EFFICIENCY CLASS	kW HEAT OUTPUT	BRICK CHIMNEY	PRE-FABRICATED	BALANCED FLUE	NATURAL GAS	LPG GAS	LOGS	BLACK GLASS	BLACK REEDED	VERMICULITE	FLUTED VERMICULITE	LEDGESTONE EFFECT	BRICK EFFECT	PROGRAMMABLE THERMOSTATIC REMOTE
Riva2 600 Conventional Flue	80.5%	C	5.00kW	✓	✓	✗	✓	✓	✓	✓	✗	✗	✗	✓	✓	✓

† Efficiency and heat output figures are based upon the maximum achieved in the options available. For more detailed technical information, including firebox dimensions and installation requirements, see page 65.

See additional images on pages 6 and 65.

Frame Options

For the complete selection of frames available with Riva2 fires see pages 8 - 9.

Riva2 600 Edge with EchoFlame Black Glass lining

Riva2 600 Designio2 Glass with EchoFlame Black Glass lining

Riva2 600

Riva2 600 Designio2 Steel with Brick-effect lining

	Efficiency & Heat Output			Chimney or Flue Options			Gas Type		Fuel Bed	Linings						Control
	E%† EFFICIENCY	EFFICIENCY CLASS	kW HEAT OUTPUT	BRICK CHIMNEY	PRE-FABRICATED	BALANCED FLUE	NATURAL GAS	LPG GAS	LOGS	BLACK GLASS	BLACK REEDED	VERMICULITE	FLUTED VERMICULITE	LEDGESTONE EFFECT	BRICK EFFECT	PROGRAMMABLE THERMOSTATIC REMOTE
Riva2 600 Conventional Flue	80.5%	C	5.00kW	✓	✓	✗	✓	✓	✓	✓	✗	✗	✗	✓	✓	✓

† Efficiency and heat output figures are based upon the maximum achieved in the options available. For more detailed technical information, including firebox dimensions and installation requirements, see page 65.

See additional images on pages 6 and 65.

Frame Options

For the complete selection of frames available with Riva2 fires see pages 8 - 9.

Riva2 600

Riva2 600 Verve XS with Ledgestone-effect lining

	Efficiency & Heat Output			Chimney or Flue Options			Gas Type		Fuel Bed	Linings						Control
	E%† EFFICIENCY	EFFICIENCY CLASS	kW HEAT OUTPUT	BRICK CHIMNEY	PRE-FABRICATED	BALANCED FLUE	NATURAL GAS	LPG GAS	LOGS	BLACK GLASS	BLACK REEDED	VERMICULITE	FLUTED VERMICULITE	LEDGESTONE EFFECT	BRICK EFFECT	PROGRAMMABLE THERMOSTATIC REMOTE
Riva2 600 Conventional Flue	80.5%	C	5.00kW	✓	✓	✗	✓	✓	✓	✓	✗	✗	✗	✓	✓	✓

† Efficiency and heat output figures are based upon the maximum achieved in the options available. For more detailed technical information, including firebox dimensions and installation requirements, see page 65.

See additional images on pages 6 and 65.

Frame Options

For the complete selection of frames available with Riva2 fires see pages 8 - 9.

Riva2 600 Icon XS with EchoFlame Black Glass lining

Riva2 600HL Edge with Brick-effect lining

Riva2 600HL

Riva2 600HL Icon XS with Ledgestone-effect lining

Riva2 600HL Evoke XS Glass with White Glass front and EchoFlame Black Glass lining

	Efficiency & Heat Output			Chimney or Flue Options			Gas Type		Fuel Bed	Linings						Control
	E%† EFFICIENCY	EFFICIENCY CLASS	kW HEAT OUTPUT	BRICK CHIMNEY	PRE-FABRICATED	BALANCED FLUE	NATURAL GAS	LPG GAS	LOGS	BLACK GLASS	BLACK REEDED	VERMICULITE	FLUTED VERMICULITE	LEDGESTONE EFFECT	BRICK EFFECT	PROGRAMMABLE THERMOSTATIC REMOTE
Riva2 600HL Conventional Flue	76%	D	5.30kW	✓	✓	✗	✓	✓	✓	✓	✗	✗	✗	✓	✓	✓

† Efficiency and heat output figures are based upon the maximum achieved in the options available. For more detailed technical information, including firebox dimensions and installation requirements, see page 66.

See additional images on page 2, 46, 48, 50, 51, 53 & 66.

Frame Options

For the complete selection of frames available with Riva2 fires see pages 8 - 9.

Riva2 600HL

Riva2 600HL Edge with EchoFlame Black Glass lining. Shown with Victorian Corbel Stone mantel in Antique White Marble

	Efficiency & Heat Output			Chimney or Flue Options			Gas Type		Fuel Bed	Linings						Control
	E%† EFFICIENCY	EFFICIENCY CLASS	kW HEAT OUTPUT	BRICK CHIMNEY	PRE-FABRICATED	BALANCED FLUE	NATURAL GAS	LPG GAS	LOGS	BLACK GLASS	BLACK REEDED	VERMICULITE	FLUTED VERMICULITE	LEDGESTONE EFFECT	BRICK EFFECT	PROGRAMMABLE THERMOSTATIC REMOTE
Riva2 600HL Conventional Flue	76%	D	5.30kW	✓	✓	✗	✓	✓	✓	✓	✗	✗	✗	✓	✓	✓

† Efficiency and heat output figures are based upon the maximum achieved in the options available. For more detailed technical information, including firebox dimensions and installation requirements, see page 66.

For further stone mantel installations see pages 46 - 53.

Frame Options

For the complete selection of frames available with Riva2 fires see pages 8 - 9.

Riva2 600HL Verve XS with EchoFlame Black Glass lining

Riva2 600HL Evoke XS Glass with Black Glass front and EchoFlame Black Glass lining

Riva2 600HL

Riva2 600HL Verve XS with Brick-effect lining

	Efficiency & Heat Output			Chimney or Flue Options			Gas Type		Fuel Bed	Linings						Control
	E%† EFFICIENCY	EFFICIENCY CLASS	kW HEAT OUTPUT	BRICK CHIMNEY	PRE-FABRICATED	BALANCED FLUE	NATURAL GAS	LPG GAS	LOGS	BLACK GLASS	BLACK REEDED	VERMICULITE	FLUTED VERMICULITE	LEDGESTONE EFFECT	BRICK EFFECT	PROGRAMMABLE THERMOSTATIC REMOTE
Riva2 600HL Conventional Flue	76%	D	5.30kW	✓	✓	✗	✓	✓	✓	✓	✗	✗	✗	✓	✓	✓

† Efficiency and heat output figures are based upon the maximum achieved in the options available. For more detailed technical information, including firebox dimensions and installation requirements, see page 66.

Frame Options

For the complete selection of frames available with Riva2 fires see pages 8 - 9.

Riva2 750HL

Riva2 750HL Icon XS with EchoFlame Black Glass lining

	Efficiency & Heat Output			Chimney or Flue Options			Gas Type		Fuel Bed	Linings						Control
	E%† EFFICIENCY	EFFICIENCY CLASS	kW HEAT OUTPUT	BRICK CHIMNEY	PRE-FABRICATED	BALANCED FLUE	NATURAL GAS	LPG GAS	LOGS	BLACK GLASS	BLACK REEDED	VERMICULITE	FLUTED VERMICULITE	LEDGESTONE EFFECT	BRICK EFFECT	PROGRAMMABLE THERMOSTATIC REMOTE
Riva2 750HL Conventional Flue	81%	C	6.90kW	✓	✓	✗	✓	✓	✓	✓	✓	✗	✓	✓	✓	✓
Riva2 750HL Balanced Flue	92%	A	7.00kW	✗	✗	✓	✓	✓	✓	✓	✓	✗	✓	✓	✓	✓

† Efficiency and heat output figures are based upon the maximum achieved in the options available. For more detailed technical information, including firebox dimensions and installation requirements, see page 67.

Frame Options

For the complete selection of frames available with Riva2 fires see pages 8 - 9.

See additional images on page 10, 47, 49, 51, 53, 59 & back cover.

Riva2 750HL Edge with Black Reeded lining

Riva2 750HL Verve XS in Graphite with EchoFlame Black Glass lining

Riva2 750HL

Riva2 750HL Evoke Glass with White Glass front and Ledgestone-effect lining

Riva2 750HL Edge with Brick-effect lining

	Efficiency & Heat Output			Chimney or Flue Options			Gas Type		Fuel Bed	Linings						Control
	E%† EFFICIENCY	EFFICIENCY CLASS	kW HEAT OUTPUT	BRICK CHIMNEY	PRE-FABRICATED	BALANCED FLUE	NATURAL GAS	LPG GAS	LOGS	BLACK GLASS	BLACK REEDED	VERMICULITE	FLUTED VERMICULITE	LEDGESTONE EFFECT	BRICK EFFECT	PROGRAMMABLE THERMOSTATIC REMOTE
Riva2 750HL Conventional Flue	81%	C	6.90kW	✓	✓	✗	✓	✓	✓	✓	✓	✗	✓	✓	✓	✓
Riva2 750HL Balanced Flue	92%	A	7.00kW	✗	✗	✓	✓	✓	✓	✓	✓	✗	✓	✓	✓	✓

† Efficiency and heat output figures are based upon the maximum achieved in the options available. For more detailed technical information, including firebox dimensions and installation requirements, see page 67.

Frame Options

For the complete selection of frames available with Riva2 fires see pages 8 - 9.

Riva2 750HL Evoke Steel with Fluted Vermiculite lining

Riva2 750HL

Riva2 750HL Evoke Glass with Black Glass front and Black Reeded lining

Riva2 750HL Edge with EchoFlame Black Glass lining

	Efficiency & Heat Output			Chimney or Flue Options			Gas Type		Fuel Bed	Linings						Control
	E%† EFFICIENCY	EFFICIENCY CLASS	kW HEAT OUTPUT	BRICK CHIMNEY	PRE-FABRICATED	BALANCED FLUE	NATURAL GAS	LPG GAS	LOGS	BLACK GLASS	BLACK REEDED	VERMICULITE	FLUTED VERMICULITE	LEDGESTONE EFFECT	BRICK EFFECT	PROGRAMMABLE THERMOSTATIC REMOTE
Riva2 750HL Conventional Flue	81%	C	6.90kW	✓	✓	✗	✓	✓	✓	✓	✓	✗	✓	✓	✓	✓
Riva2 750HL Balanced Flue	92%	A	7.00kW	✗	✗	✓	✓	✓	✓	✓	✓	✗	✓	✓	✓	✓

† Efficiency and heat output figures are based upon the maximum achieved in the options available. For more detailed technical information, including firebox dimensions and installation requirements, see page 67.

Frame Options

For the complete selection of frames available with Riva2 fires see pages 8 - 9.

Riva2
Stone Mantels

Riva2 600HL Edge with Brick-effect lining and Claremont Mantel in Limestone with matching slip set

Traditional Style with a Modern Slant...

Gazco's collection of six high quality stone mantels and optional hearths are available in a choice of either Limestone or Antique White Marble, each piece truly unique by virtue of the naturally occurring veining, subtle tonal differences and indeed even small fossils that may be found in the limestone. Each mantel is a beautiful and natural complement to many of the high efficiency fires shown in this brochure and the perfect way to create a grand finish and a timeless fireplace in your home.

Limestone

Antique White Marble

For more information on Gazco's stone mantels and hearths please see page 68.

Mantel Styles	Claremont	Cavendish Bolection	Georgian Roundel	Grafton	Sandringham	Victorian Corbel
Dimensions Δ **w x h (mm)**	1555 x 1143	1460 x 1320	1460 x 1082	1415 x 1165	1550 x 1220	1525 x 1170

Riva2 750 Edge with Ledgestone-effect lining and Grafton Mantel in Limestone with matching slip sets

Victorian Corbel

Claremont

Sandringham

Cavendish Bolection

Georgian Roundel

Grafton

(All the above images are shown with a Riva2 750HL fire and matching slip sets)

**Riva2 600HL & 750HL slip sets are available from Gazco.*

Bespoke sourcing will be required for Riva2 400, 500, 600, 530 & 500HL Slimline slip sets or back panels for any other fires.

Δ *Overall visible dimensions upon installation. For more detailed information, including firebox dimensions, please see page 62 onwards.*

Riva2 Stone Mantels

Sandringham Mantel detail

Riva2 500HL Slimline Edge with Vermiculite Lining and Sandringham Mantel in Limestone

Riva2 600HL Edge with Echoflame Black Glass lining and Claremont Mantel with large hearth in Limestone and matching slip sets

Fire Choices	Pages
Riva2 400 Edge	12 - 17
Riva2 500 Edge	18 - 23
Riva2 500HL Slimline Edge	24 - 27
Riva2 600 Edge	28 - 33
Riva2 600HL Edge	34 - 39
Riva2 750HL Edge	40 - 45

Mantel Styles	Dimensions w x h (mm)	Opening Dimensions w x h (mm)
Claremont	1555 x 1143	915 x 915
Cavendish Bolection	1460 x 1320	915 x 915
Georgian Roundel	1460 x 1082	915 x 915
Grafton	1415 x 1165	915 x 915
Sandringham	1550 x 1220	915 x 915
Victorian Corbel	1525 x 1170	915 x 915

Stone Choices

Limestone

Antique White Marble

For further details on the complementary hearth options and slip sets, please see page 68.

Riva2 750HL Edge with Brick-effect lining and Grafton Mantel and small hearth in Antique White Mantel with matching slip sets

Riva2 600HL with EchoFlame Black Glass lining and Sandringham Mantel, slip sets and small hearth in Limestone

Riva2 Stone Mantels (continued)

Victorian Corbel Mantel detail

Riva2 750HL with Black Reeded lining and Cavendish Bolection Mantel and slip sets in Limestone

Riva2 600HL with Brick-effect lining and Victorian Corbel Mantel in Antique White Marble with matching slip sets

With matching stone slip sets available, these impressive stone mantels have been specifically designed to complement fires such as the Riva2 600HL and Riva2 750HL Edge fires. However, by incorporating a back panel of your choosing, these work equally well with the Riva2 500 Edge. Your styling options continue with a choice of distinctive lining options, allowing you to choose a look that will best suit you and your home.

Fire Choices	Pages
Riva2 400 Edge	12 - 17
Riva2 500 Edge	18 - 23
Riva2 500HL Slimline Edge	24 - 27
Riva2 600 Edge	28 - 33
Riva2 600HL Edge	34 - 39
Riva2 750HL Edge	40 - 45

Mantel Styles	Dimensions w x h (mm)	Opening Dimensions w x h (mm)
Claremont	1555 x 1143	915 x 915
Cavendish Bolection	1460 x 1320	915 x 915
Georgian Roundel	1460 x 1082	915 x 915
Grafton	1415 x 1165	915 x 915
Sandringham	1550 x 1220	915 x 915
Victorian Corbel	1525 x 1170	915 x 915

Stone Choices

Limestone

Antique White Marble

For further details on the complementary hearth options and slip sets, please see page 68.

Riva2 500 Edge with Ledgestone-effect lining and Cavendish Bolection Mantel in Limestone

Riva2 Stone Mantels (continued)

Riva2 750HL Edge with Fluted Vermiculite lining and Georgian Roundel Mantel, slip sets and large hearth in Antique White Marble.

Riva2 600HL Edge Glass with EchoFlame Black Glass lining and Claremont Limestone Mantel with matching slip sets

The Riva2 stone mantel collection features the finest quality hand-finished craftsmanship and provides the ultimate in aesthetic and tactile appeal for your home. Paired with a high efficiency Riva2 fire, you can enjoy all the authentic charm of a highly realistic log-effect fire in a timeless mantel fireplace, fully operational from the comfort of your favourite armchair using the convenient Programmable Thermostatic remote control supplied.

Fire Choices	Pages
Riva2 400 Edge	12 - 17
Riva2 500 Edge	18 - 23
Riva2 500HL Slimline Edge	24 - 27
Riva2 600 Edge	28 - 33
Riva2 600HL Edge	34 - 39
Riva2 750HL Edge	40 - 45

Mantel Styles	Dimensions w x h (mm)	Opening Dimensions w x h (mm)
Claremont	1555 x 1143	915 x 915
Cavendish Bolection	1460 x 1320	915 x 915
Georgian Roundel	1460 x 1082	915 x 915
Grafton	1415 x 1165	915 x 915
Sandringham	1550 x 1220	915 x 915
Victorian Corbel	1525 x 1170	915 x 915

Stone Choices

Limestone

Antique White Marble

For further details on the complementary hearth options and slip sets, please see page 68.

Studio 3 Balanced Flue Edge 'Cool Wall' with Log-effect bed and Vermiculite lining

Gazco Reflex & Studio Fires

Reflex 75T Evoke Steel with Graphite front and rear with Ledgestone-effect lining

Reflex 105-3 (three-sided fire) with EchoFlame Black Glass lining, with Left Open Corner Ventilation Bar

Studio 1 Freestanding Conventional Flue with Black front and matching bench, Pebble & Stone fuel bed and black reeded lining

Reflex Gas Fires

Delivering the ultimate in realistic flames, Reflex fires provide extraordinary visuals that are almost indistinguishable from a real woodburning fire. Ambience is heightened with each fire's powerful LED ember bed, which provides glowing up-lighting below the flames for added realism.

A range of fire options include single sided conventional and balanced flue models that can be installed with a choice of stylish frames or Gazco's range of classical stone mantels, depending on your preference. For a strikingly bespoke installation, Reflex two and three sided fires grant an unparalleled view of the stunning flames, which can be viewed from almost anywhere in the room. These elegantly contemporary fires allow for a beautifully unique fireplace, whether positioned centrally or as a corner fire.

Studio Gas Fires

Gazco Studio fires combine eye-catching aesthetics, superb heating performance and versatile installation options to create a stylish, contemporary gas fire range. Suitable for a range of homes with or without a chimney, the Studio collection includes landscape and portrait fires, freestanding stoves, as well as Slimline fires for cavity wall installation.

The striking flame visuals of the Studio can be customised with a host of different styling options such as frames and lining options, depending on the model, letting you tailor your fire to your tastes.

Further information about these exciting ranges can found in separate, dedicated brochures, which can be requested from your local retailer or viewed online at **www.gazco.com.**

eReflex 135R with Log & Pebble fuel effects

Gazco Electric Fires

eReflex 75R Inset with Log & Pebble fuel effects. Shown with Claremont Limestone mantel

eReflex 110W Trento Right Offset with Log & Pebble fuel effects.

In addition to the wide selection of gas fires shown in this brochure, Gazco also offers an extensive array of highly realistic, stylish electric fires which are covered in separate dedicated brochures.

Offered in a wealth of styling options, these fires feature the very latest technology with realistic flames for a versatile and stunning focal point in any home – all without the need for a chimney!

eco DESIGN COMPLIANT

Fires such as the Gazco eReflex combine stunning LED flame effects with mood enhancing lighting features, effortlesslysetting the atmosphere with their stylish Chromalight® feature.

chromalight®

Available in hang-on-the-wall, hearth mounted or frameless inset options, as well as a wide selection of contemporary frames and matching classic stone mantels; Gazco's cutting edge electric range has it all.

Whether you want to achieve a modern contemporary look or a more classic, traditional interior, Gazco's electric fires and stoves brochures have the perfect solution whatever your style or budget.

To view Gazco's electric fires and stoves brochures, visit www.gazco.com or speak to your local Gazco retailer.

Your Home and Flue Requirements...

Conventional Flue

Conventional flue systems are for Gazco's Open Fronted and some Glass Fronted gas fires. They are easily recognisable as either a conventional brick or stone chimney, or as a pre-fabricated chimney system. Should your home have neither at present, it is usually possible to have a pre-fabricated system installed in your home if required.

Brick/Stone Chimney

(Class 1)

The chimney stack rises well above the roofline and is topped by a traditional chimney pot or gas terminal. This type of chimney relies on the natural circulation of heated air to expel the products of combustion up your chimney.

Pre-fabricated Flues

(Class 1 & 2)

You will see a metal flue cowl on your roof. Some are all metal whilst others may terminate through a short rectangular pot (but without a chimney stack). These flues create the same circulation of heated air as a brick or stone chimney.

Balanced Flue

Balanced flues work in conjunction with Gazco's Glass Fronted gas fires only. The appliance is completely sealed from the room into which it is installed (so there are no draughts and heating efficiency is increased) and a twin-wall pipe vents directly to an outside wall.

Balanced Flue

(No chimney required)

Air for combustion is drawn in through the outer pipe whilst the inner pipe removes the combustion gases to the exterior of the property. Depending on the fire selected, the twin-walled pipe may exit horizontally through an external wall or vertically through the roof. Gazco offers a comprehensive range of balanced flue system components. Please refer to our dedicated Concentric Flue System brochure which can be requested from your retailer or viewed online at **www.gazco.com.**

No Air Vent Required (UK)

All fires shown with this symbol have the advantage of not normally requiring an air vent*. Please discuss this in full with your local retailer.

*Requirements in the Republic of Ireland are different.

Riva2 750HL with Fluted Vermiculite lining and Victorian. Corbel Mantel and Hearth in Limestone with matching slip set.

Riva2 Summary

Riva2 500HL Slimline Edge with EchoFlame Black Glass lining

Fuel Bed:	Riva2 400	Riva2 500	Riva2 500HL Slimline	Riva2 600	Riva2 600HL	Riva2 750HL
Realistic Logs	✓	✓	✓	✓	✓	✓
Choice of Linings:						
Brick-effect	✗	✓	✗	✓	✓	✓
Vermiculite	✓	✓	✓	✗	✗	✗
Fluted Vermiculite	✗	✗	✗	✗	✗	✓
Black Reeded	✓	✓	✓	✗	✗	✓
EchoFlame Black Glass	✓	✓	✓	✓	✓	✓
Ledgestone-effect	✗	✓	✗	✓	✓	✓
Installation Type:						
Hearth Mounted Installation	✓	✓	✓	✓	✓	✓
Wall Installation	✓	✓	✓	✓	✓	✓
Key Features:						
Timer and Thermostat Programmable Remote	✓	✓	✓	✓	✓	✓
Glass Fronted High Efficiency	✓	✓	✓	✓	✓	✓
Natural Gas or LPG	✓	✓	✓	✓	✓	✓
Wide Selection of Frames (see pages 8-9)	✓	✓	✓	✓	✓	✓
Frameless 'Edge' Option	✓	✓	✓	✓	✓	✓
Non-reflective Glass	✓	✗	✓	✓	✓	✓
Conventional Flue ODS safety device*	✓	✓	✗	✓	✓	✓
Balanced Flue Firebox Relief Venting System Δ	✗	✓	✓	✗	✗	✓
Additional air vent required	✗	✗	✗	✗	✗	✓
Conventional Flue	✓	✓	✗	✓	✓	✓
Balanced Flue	✗	✓◊	✓	✗	✗	✓
Maximum Heat Output	3.80kW	4.90kW	4.60kW	5.00kW	4.60kW	7.00kW
Energy Efficiency Class #	C	A	B	C	D	A
Maximum Efficiency #	**81%**	**93.9%**	**86%**	**80.5%**	**76%**	**92%**

** ODS (Oxygen Depletion Sensor) - This Conventional Flue safety feature will shut off the gas supply to the burner in the event of a reduction to oxygen levels in the room.*

Δ All Gazco Balanced Flue fires have relief vents in the firebox ensuring compliance with EN 613:2001 for delayed ignition safety standards.

 # Efficiency figures given are based upon the maximum achieved in the options available for each model, for further technical information, please see pages 62 - 69.

Technical Information

Riva2 400

RIVA2 400 FIRE INFORMATION

	Product Code	Flue Type	Gas Type	Heat Input	Heat Output	Energy Efficiency Class	Efficiency	Remote Control	Lining	Opening Size (mm)		
										w	h	d
⊗	**134-067**	Conventional	Nat. Gas	5.20kW	3.80kW	C	81%	Prog. Thermostatic	Vermiculite	425	560	350
⊗	**134-433**	Conventional	LPG	5.10kW	3.80kW	C	81%	Prog. Thermostatic	Vermiculite	425	560	350
⊗	**134-050**	Conventional	Nat Gas	5.20kW	3.80kW	C	81%	Prog. Thermostatic	Black Reeded	425	560	350
⊗	**134-424**	Conventional	LPG	5.10kW	3.80kW	C	81%	Prog. Thermostatic	Black Reeded	425	560	350
⊗	**134-042**	Conventional	Nat. Gas	5.20kW	3.80kW	C	81%	Prog. Thermostatic	Black Glass	425	560	350
⊗	**134-416**	Conventional	LPG	5.10kW	3.80kW	C	81%	Prog. Thermostatic	Black Glass	425	560	350

RIVA2 400 FRAME INFORMATION

Description	Frame Finish	Product Code	Frame Size (mm)		
			w	h	d
Verve XS	Graphite	**934-045**	617	887	46
Verve XS Base Module	Graphite	**934-066**	617	256	46
Verve XS Top Module	Graphite	**934-071**	617	732	46
Evoke XS Glass	Black Glass front & Graphite rear	**934-106**	617	617	32
Evoke XS Glass	White Glass front & Graphite rear	**934-113**	617	617	32
Icon XS	Black Glass	**934-120**	617	617	17

RIVA2 400 OPTIONS

Product Code	Description
934-162	Riva2 400 Vermiculite Lining Set
934-153	Riva2 400 Black Reeded Lining Set
934-140	Riva2 400 Black Glass Lining Set
999-620	Remote System Mains Adaptor

Riva2 400 Icon XS with Vermiculite lining

The above information is to assist you in your choice of a suitable Gazco fire. This is not intended to be all the information required to install your fire. This can be obtained from your local Gazco retailer or you can download the full installation instructions from the Gazco website at **www.gazco.com**

RIVA2 400 DIMENSIONS (mm)

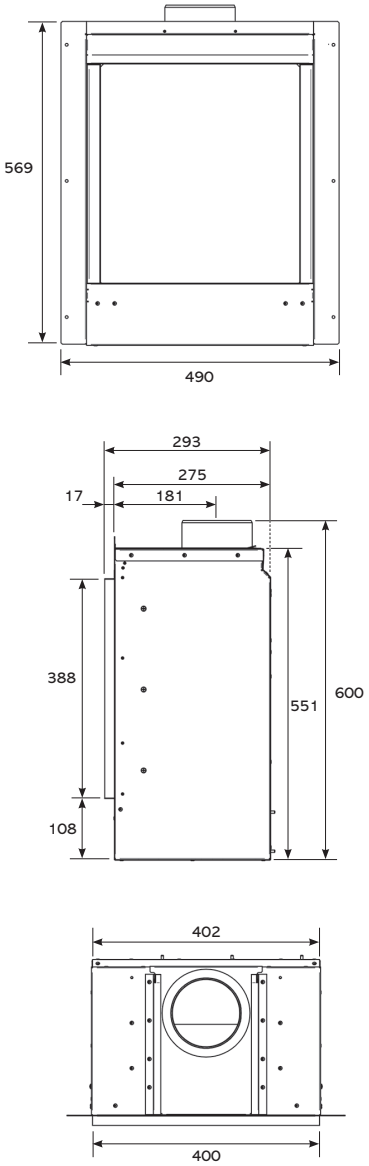

RIVA2 400 VERVE XS FRAME

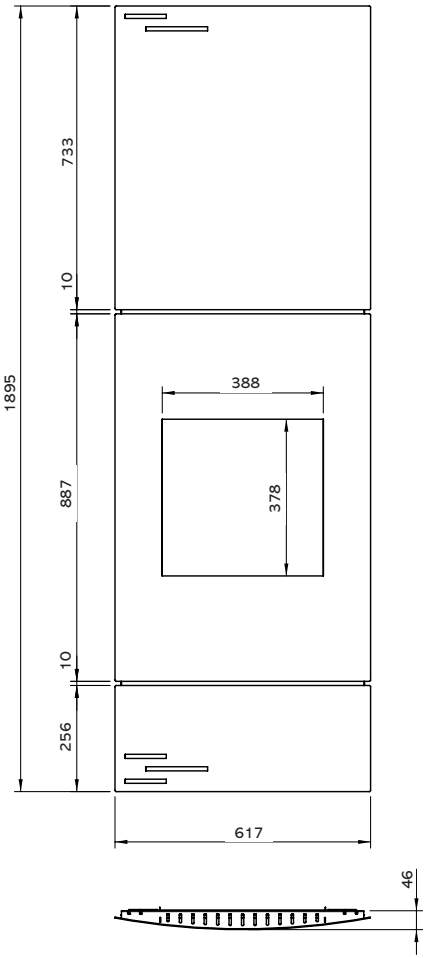

Riva2 500

FIRE INFORMATION

Product Code	Flue Type	Gas Type	Heat Input	Heat Output	Energy Efficiency Class	Efficiency	Remote Control	Lining	Opening Size (mm) w	h	d
134-070	Conventional	Nat. Gas	6.4kW	4.4kW	D	76%	Prog. Thermostatic	Black Reeded	560	565	350
134-796	Conventional	LPG	6.4kW	4.5kW	D	76%	Prog. Thermostatic	Black Reeded	560	565	350
134-118	Conventional	Nat. Gas	6.4kW	4.4kW	D	76%	Prog. Thermostatic	Vermiculite	560	565	350
134-784	Conventional	LPG	6.4kW	4.5kW	D	76%	Prog. Thermostatic	Vermiculite	560	565	350
134-147	Conventional	Nat. Gas	6.4kW	4.4kW	D	76%	Prog. Thermostatic	Brick-effect	560	565	350
134-756	Conventional	LPG	6.4kW	4.5kW	D	76%	Prog. Thermostatic	Brick-effect	560	565	350
134-026	Conventional	Nat. Gas	6.4kW	4.4kW	D	76%	Prog. Thermostatic	Black Glass	560	565	350
134-435	Conventional	LPG	6.4kW	4.5kW	D	76%	Prog. Thermostatic	Black Glass	560	565	350
134-382	Conventional	Nat. Gas	6.4kW	4.4kW	D	76%	Prog. Thermostatic	Ledgestone-effect	560	565	350
134-766	Conventional	LPG	6.4kW	4.5kW	D	76%	Prog. Thermostatic	Ledgestone-effect	560	565	350
134-275	Balanced	Nat. Gas	5.8kW	4.9kW	A	93.9%	Prog. Thermostatic	Black Reeded	560	565	350
134-447	Balanced	LPG	5.7kW	4.9kW	A	93.9%	Prog. Thermostatic	Black Reeded	560	565	350
134-308	Balanced	Nat. Gas	5.8kW	4.9kW	A	93.9%	Prog. Thermostatic	Vermiculite	560	565	350
134-516	Balanced	LPG	5.7kW	4.9kW	A	93.9%	Prog. Thermostatic	Vermiculite	560	565	350
134-321	Balanced	Nat. Gas	5.8kW	4.9kW	A	93.9%	Prog. Thermostatic	Brick-effect	560	565	350
134-583	Balanced	LPG	5.7kW	4.9kW	A	93.9%	Prog. Thermostatic	Brick-effect	560	565	350
134-346	Balanced	Nat. Gas	5.8kW	4.9kW	A	93.9%	Prog. Thermostatic	Black Glass	560	565	350
134-682	Balanced	LPG	5.7kW	4.9kW	A	93.9%	Prog. Thermostatic	Black Glass	560	565	350
134-333	Balanced	Nat. Gas	5.8kW	4.9kW	A	93.9%	Prog. Thermostatic	Ledgestone-effect	560	565	350
134-731	Balanced	LPG	5.7kW	4.9kW	A	93.9%	Prog. Thermostatic	Ledgestone-effect	560	565	350

FRAME INFORMATION

Description	Frame Finish	Product Code	Frame Size (mm) w	h	d
Icon XS	Black Glass	**934-388**	855	694	17
Verve XS	Graphite	**934-033**	890	621	57
Ellingham	Matt Black Cast Iron	**934-470**	885	678	75
Evoke Glass	Black Glass front/ Graphite rear	**934-366**	869	710	40
Evoke Glass	White Glass front/ Graphite rear	**934-397**	869	710	40
Evoke Steel	Graphite front and rear	**934-330**	869	710	40

† For more Balanced Flue information please refer to our Concentric Flue System brochure which can be viewed at **www.gazco.com**

RIVA2 500 OPTIONS

Product Code	Description
934-005	Black Reeded Lining Set - Conventional Flue
934-021	Vermiculite Lining Set - Conventional Flue
934-030	Brick-effect Lining Set - Conventional Flue
934-018	Black Glass Lining Set - Conventional Flue
934-206	Ledgestone-effect Lining Set - Conventional Flue
934-159	Black Reeded Lining Set - Balanced Flue
934-181	Vermiculite Lining Set - Balanced Flue
934-203	Brick-effect Lining Set - Balanced Flue
934-109	Black Glass Lining Set - Balanced Flue
934-219	Ledgestone-effect Lining Set - Balanced Flue
999-620	Remote system mains adaptor
8572	Warm air ducting kit (2 outlets)- Balanced Flue
8509	Balanced flue kit - up and out †
8524	Balanced flue kit - vertical †
999-201	Horizontal Exit terminal guard (required for below 2m) †
928-315	Chimney Renovation Kit

RIVA2 500 DIMENSIONS (mm)

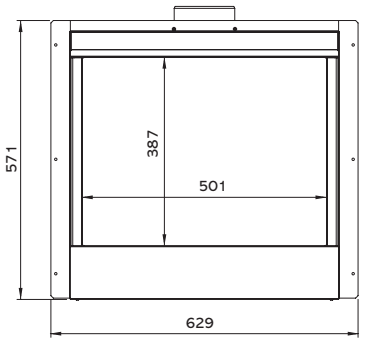

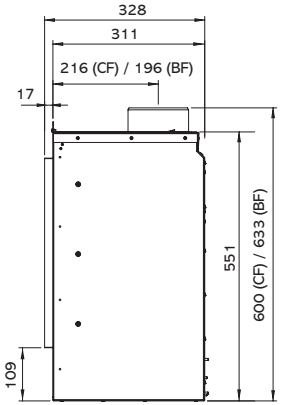

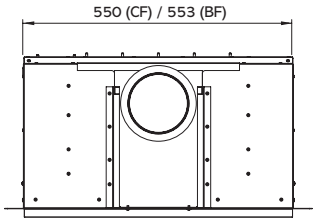

CHIMNEY RENOVATION KIT

This innovative addition allows your balanced flue Riva2 500 fire to be installed in an existing fireplace opening with the option of either a single liner using the masonry chimney to bring in air or with two liners. Your retailer will be able to advise on your specific requirements. See page 69 for diagram.

Riva2 500 Ellingham with Black Reeded lining

Riva2 500HL Slimline

RIVA2 500HL SLIMLINE FIRE INFORMATION

Product Code	Flue Type	Gas Type	Heat Input	Heat Output	Energy Efficiency Class	Efficiency	Remote Control	Lining	Opening Size (mm)		
									w	h	d
134-126	Balanced	Nat. Gas	6.00kW	4.60kW	B	86%	Prog. Thermostatic	Vermiculite	565	695	240
134-499	Balanced	LPG	4.90kW	3.80kW	C	84%	Prog. Thermostatic	Vermiculite	565	695	240
134-115	Balanced	Nat Gas	6.00kW	4.60kW	B	86%	Prog. Thermostatic	Black Reeded	565	695	240
134-481	Balanced	LPG	4.90kW	3.80kW	C	84%	Prog. Thermostatic	Black Reeded	565	695	240
134-102	Balanced	Nat. Gas	6.00kW	4.60kW	B	86%	Prog. Thermostatic	Black Glass	565	695	240
134-478	Balanced	LPG	4.90kW	3.80kW	C	84%	Prog. Thermostatic	Black Glass	565	695	240

RIVA2 500HL SLIMLINE FRAME INFORMATION

Description	Frame Finish	Product Code	Frame Size (mm)		
			w	h	d
Verve XS	Graphite	**934-229**	890	755	57
Icon XS	Black Glass	**934-247**	855	828	27
Esprit	Graphite	**934-268**	746	1211	125

RIVA2 500HL SLIMLINE OPTIONS

Product Code	Description
934-289	Riva2 500 HL Slimline Balanced Flue Black Reeded Lining Set
934-294	Riva2 500 HL Slimline Balanced Flue Vermiculite Lining Set
934-306	Riva2 500 HL Slimline Balanced Flue Black Glass Effect Lining Set
999-620	Remote System Mains Adaptor

RIVA2 500HL SLIMLINE DIMENSIONS (mm)

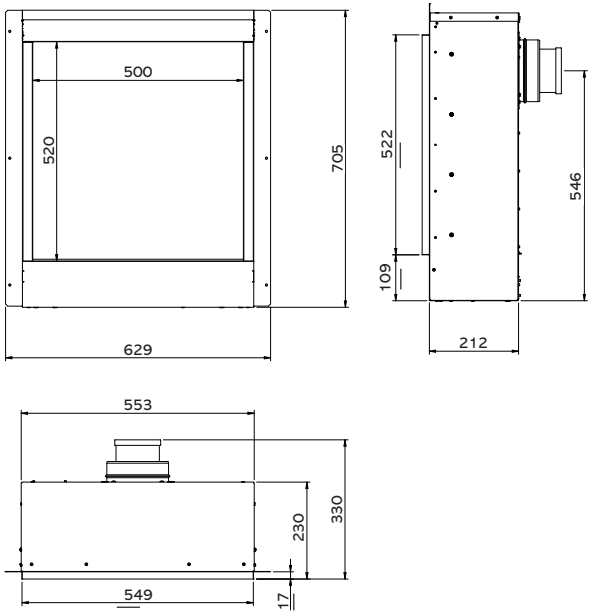

RIVA2 500HL SLIMLINE ESPRIT SURROUND

When installed into the inner leaf of a cavity wall, the front face of the appliance will require a 75mm (3") rebated surround complete with a finishing slip to house the remaining appliance depth. Alternatively, a slim studwork chimney breast could be constructed and the appliance can then either be finished as an "Edge" installation or finished with either the Verve XS or Icon fronts. The appliance is also suitable for installation into a cavity wall in conjunction with the Esprit front which will house the remaining depth.

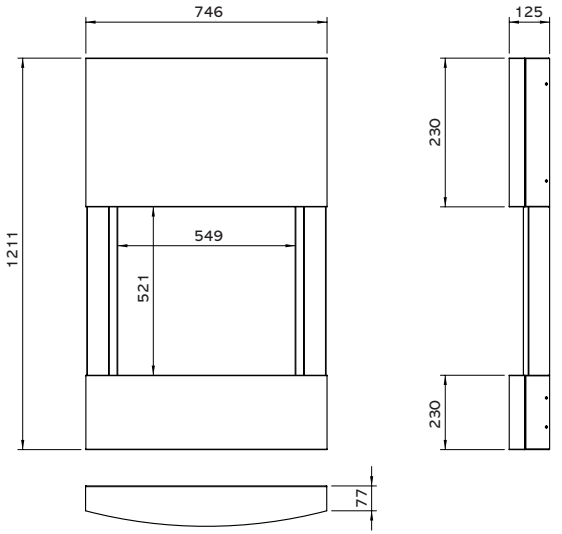

TYPICAL INSTALLATION FOR ESPRIT SURROUND

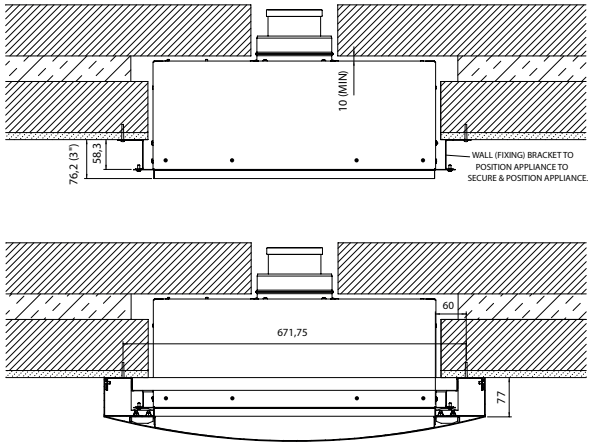

TYPICAL INSTALLATION FOR EDGE, VERVE XS & ICON XS

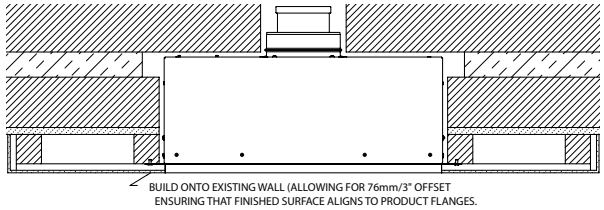

REAR EXIT BALANCED FLUE TERMINATION KIT

The Riva2 500HL Slimline comes complete with a specific rear exit balanced flue termination kit (8526) included.

395 x 200 x 200 mm (H x W x D) Guard supplied. Cut to length as required on site.

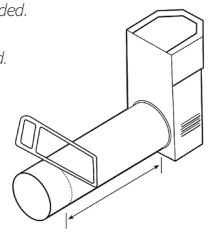

The above information is to assist you in your choice of a suitable Gazco fire. This is not intended to be all the information required to install your fire. This can be obtained from your local Gazco retailer or you can download the full installation instructions from the Gazco website at **www.gazco.com**

Riva2 600

FIRE INFORMATION

Product Code	Flue Type	Gas Type	Heat Input	Heat Output	Energy Efficiency Class	Efficiency	Remote Control	Lining	Opening Size (mm)		
									w	h	d
134-028	Conventional	Nat. Gas	6.90kW	5.00kW	C	80.5%	Prog. Thermostatic	Black Glass	674	564	350
134-509	Conventional	LPG	6.50kW	4.80kW	C	80.5%	Prog. Thermostatic	Black Glass	674	564	350
134-044	Conventional	Nat. Gas	6.90kW	5.00kW	C	80.5%	Prog. Thermostatic	Brick-effect	674	564	350
134-522	Conventional	LPG	6.50kW	4.80kW	C	80.5%	Prog. Thermostatic	Brick-effect	674	564	350
134-052	Conventional	Nat. Gas	6.90kW	5.00kW	C	80.5%	Prog. Thermostatic	Ledgestone-effect	674	564	350
134-542	Conventional	LPG	6.50kW	4.80kW	C	80.5%	Prog. Thermostatic	Ledgestone-effect	674	564	350

RIVA2 600 FRAME INFORMATION

Description	Frame Finish	Product Code	Frame Size (mm)		
			w	h	d
Icon XS	Black Glass	**934-447**	933	668	26
Verve XS	Graphite	**934-504**	990	685	67
Designio2 Steel	Graphite	**934-622**	790	603	38
Designio2 Glass	Black Glass	**934-649**	790	603	41

RIVA2 600 OPTIONS

Product Code	Description
934-534	Riva2 600 Black Glass Lining Set
934-251	Riva2 600 Brick-effect Lining Set
934-405	Riva2 600 Ledgestone-effect Lining Set
8572	Warm Air Ducting Kit (2 Outlets)
999-620	Remote System Mains Adaptor

Riva2 600 Edge with EchoFlame Black Glass lining

RIVA2 600 DIMENSIONS (mm)

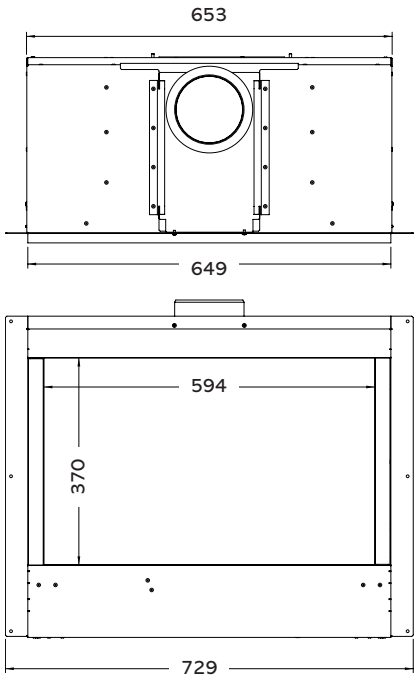

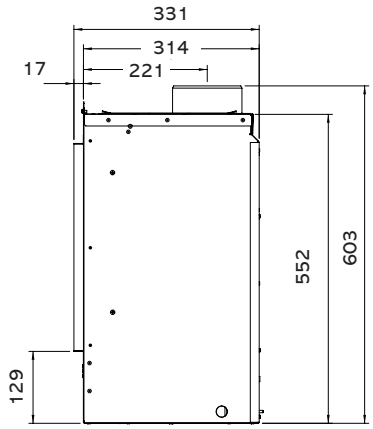

Riva2 600HL

RIVA2 600HL FIRE INFORMATION

Product Code	Flue Type	Gas Type	Heat Input	Heat Output	Energy Efficiency Class	Efficiency	Remote Control	Lining	Opening Size (mm) w	h	d
134-330	Conventional	Nat. Gas	7.70kW*	5.30kW	D	76%	Prog. Thermostatic	Brick-effect	671	793	350
134-674	Conventional	LPG	6.60kW	4.60kW	D	76%	Prog. Thermostatic	Brick-effect	671	793	350
134-343	Conventional	Nat Gas	7.70kW*	5.30kW	D	76%	Prog. Thermostatic	Ledgestone-effect	671	793	350
134-685	Conventional	LPG	6.60kW	4.60kW	D	76%	Prog. Thermostatic	Ledgestone-effect	671	793	350
134-324	Conventional	Nat. Gas	7.70kW*	5.30kW	D	76%	Prog. Thermostatic	Black Glass	671	793	350
134-661	Conventional	LPG	6.60kW	4.60kW	D	76%	Prog. Thermostatic	Black Glass	671	793	350

* Riva2 600HL NG: 7.7kW is the gross input figure. The net input of the product is 6.9kW and does not normally require any addition purpose provided ventilation or modification to the building in order to provide extra air circulation as a result of installing this product.

RIVA2 600HL OPTIONS

Product Code	Description
934-572	Riva2 600HL Conventional Flue Brick Effect Lining Set
934-588	Riva2 600HL Conventional Flue Ledgestone Lining Set
934-591	Riva2 600HL Conventional Flue Black Glass Lining Set
999-620	Remote System Mains Adaptor

RIVA2 600HL FRAME INFORMATION

Description	Frame Finish	Product Code	Frame Size (mm) w	h	d
Verve XS	Graphite	**934-702**	990	915	64
Evoke XS Glass	Black Glass front & Graphite rear	**934-734**	926	889	32
Evoke XS Glass	White Glass front & Graphite rear	**934-748**	926	889	32
Icon XS	Black Glass	**934-715**	933	898	17

STONE MANTEL INFORMATION

Claremont (requires slip set)	Antique White Marble	**9002CLWM**	1555	1143	190
Claremont (requires slip set)	Limestone	**9002CLTL**	1555	1143	190
Cavendish Bolection (requires slip set)	Antique White Marble	**9000CAWM**	1460	1320	207
Cavendish Bolection (requires slip set)	Limestone	**9000CATL**	1460	1320	207
Georgian Roundel (requires slip set)	Antique White Marble	**9001GEWM**	1460	1082	200
Georgian Roundel (requires slip set)	Limestone	**9001GETL**	1460	1082	200
Grafton (requires slip set)	Antique White Marble	**9003GRWM**	1415	1165	105
Grafton (requires slip set)	Limestone	**9003GRTL**	1415	1165	105
Victorian Corbel (requires slip set)	Antique White Marble	**9004VIWM**	1525	1170	250
Victorian Corbel (requires slip set)	Limestone	**9004VITL**	1525	1170	250
Sandringham (requires slip set)	Antique White Marble	**9005SAWM**	1550	1220	227
Sandringham (requires slip set)	Limestone	**9005SATL**	1550	1220	227
Slip set for Stone Mantel	Antique White Marble	**934-804**	N/A	N/A	N/A
Slip set for Stone Mantel	Limestone	**934-783**	N/A	N/A	N/A
Small Hearth for Stone Mantel	Antique White Marble	**934-241**	1524	53	228
Small Hearth for Stone Mantel	Limestone	**934-193**	1524	53	228
Large Hearth for Stone Mantel	Antique White Marble	**934-489**	1625	53	457
Large Hearth for Stone Mantel	Limestone	**934-351**	1625	53	457

RIVA2 600HL DIMENSIONS (mm)

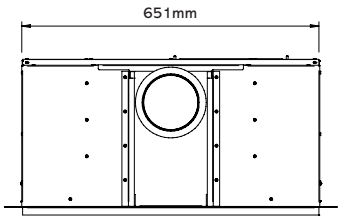

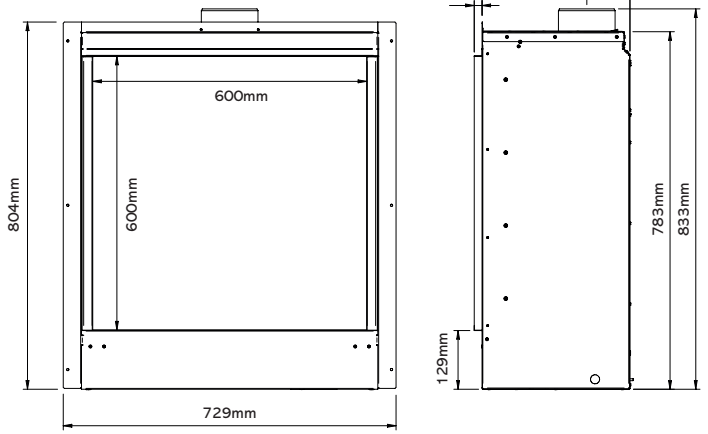

Riva2 600HL Verve XS with Ledgestone-effect lining.

The above information is to assist you in your choice of a suitable Gazco fire. This is not intended to be all the information required to install your fire. This can be obtained from your local Gazco retailer or you can download the full installation instructions from the Gazco website at **www.gazco.com**

Riva2 750HL

FIRE INFORMATION

Product Code	Flue Type	Gas Type	Heat Input	Heat Output	Energy Efficiency Class	Efficiency	Remote Control	Lining	Opening Size (mm)		
									w	h	d
134-089	Conventional flue	Nat. Gas	8.70kW	6.30kW	C	81%	Prog. Thermostatic	Black Reeded	816	885	350
134-489	Conventional flue	LPG	9.20kW	6.90kW	C	81%	Prog. Thermostatic	Black Reeded	816	885	350
134-113	Conventional flue	Nat. Gas	8.70kW	6.30kW	C	81%	Prog. Thermostatic	Fluted Vermiculite	816	885	350
134-501	Conventional flue	LPG	9.20kW	6.90kW	C	81%	Prog. Thermostatic	Fluted Vermiculite	816	885	350
134-139	Conventional flue	Nat. Gas	8.70kW	6.30kW	C	81%	Prog. Thermostatic	Brick-effect	816	885	350
134-528	Conventional flue	LPG	9.20kW	6.90kW	C	81%	Prog. Thermostatic	Brick-effect	816	885	350
134-020	Conventional flue	Nat. Gas	8.70kW	6.30kW	C	81%	Prog. Thermostatic	Black Glass	816	885	350
134-632	Conventional flue	LPG	9.20kW	6.90kW	C	81%	Prog. Thermostatic	Black Glass	816	885	350
134-039	Conventional flue	Nat. Gas	8.70kW	6.30kW	C	81%	Prog. Thermostatic	Ledgestone-effect	816	885	350
134-561	Conventional flue	LPG	9.20kW	6.90kW	C	81%	Prog. Thermostatic	Ledgestone-effect	816	885	350
134-033	Balanced flue	Nat. Gas	8.40kW	7.00kW	A	92%	Prog. Thermostatic	Black Reeded	816	885	380
134-421	Balanced flue	LPG	8.20kW	6.90kW	A	92%	Prog. Thermostatic	Black Reeded	816	885	380
134-047	Balanced flue	Nat. Gas	8.40kW	7.00kW	A	92%	Prog. Thermostatic	Fluted Vermiculite	816	885	380
134-439	Balanced flue	LPG	8.20kW	6.90kW	A	92%	Prog. Thermostatic	Fluted Vermiculite	816	885	380
134-059	Balanced flue	Nat. Gas	8.40kW	7.00kW	A	92%	Prog. Thermostatic	Brick-effect	816	885	380
134-466	Balanced flue	LPG	8.20kW	6.90kW	A	92%	Prog. Thermostatic	Brick-effect	816	885	380
134-084	Balanced flue	Nat. Gas	8.40kW	7.00kW	A	92%	Prog. Thermostatic	Black Glass	816	885	380
134-495	Balanced flue	LPG	8.20kW	6.90kW	A	92%	Prog. Thermostatic	Black Glass	816	885	380
134-076	Balanced flue	Nat. Gas	8.40kW	7.00kW	A	92%	Prog. Thermostatic	Ledgestone-effect	816	885	380
134-480	Balanced flue	LPG	8.20kW	6.90kW	A	92%	Prog. Thermostatic	Ledgestone-effect	816	885	380

RIVA2 750HL FRAME INFORMATION

Description	Frame Finish	Product Code	Frame Size (mm)		
			w	h	d
Verve XS	Graphite	**934-213**	1202	1005	57
Evoke Glass	Black Glass front & Graphite rear	**934-245**	1117	1034	42
Evoke Glass	White Glass front & Graphite rear	**934-264**	1117	1034	42
Evoke Steel	Graphite front & rear	**934-281**	1117	1034	42
Icon XS	Black Glass	**934-371**	1089	1015	17

CHIMNEY RENOVATION KIT

This innovative addition allows your balanced flue Riva2 750HL fire to be installed in an existing fireplace opening with the option of either a single liner using the masonry chimney to bring in air or with two liners. Your retailer will be able to advise on your specific requirements. See page 77 for diagram.

RIVA2 750HL OPTIONS

Product Code	Description
934-011	CF Black Reeded Lining Set
934-053	CF Fluted Vermiculite Lining Set
934-060	CF Brick-effect Lining Set
934-226	CF Black Glass Lining Set
934-284	CF Ledgestone-effect Lining Set
934-037	BF Black Reeded Lining Set
934-062	BF Fluted Vermiculite Lining Set
934-077	BF Brick-effect Lining Set
934-091	BF Black Glass Lining Set
934-086	BF Ledgestone-effect Lining Set
999-620	Remote System Mains Adaptor
928-315	Chimney Renovation Kit

RIVA2 750HL DIMENSIONS (mm)

Conventional Flue

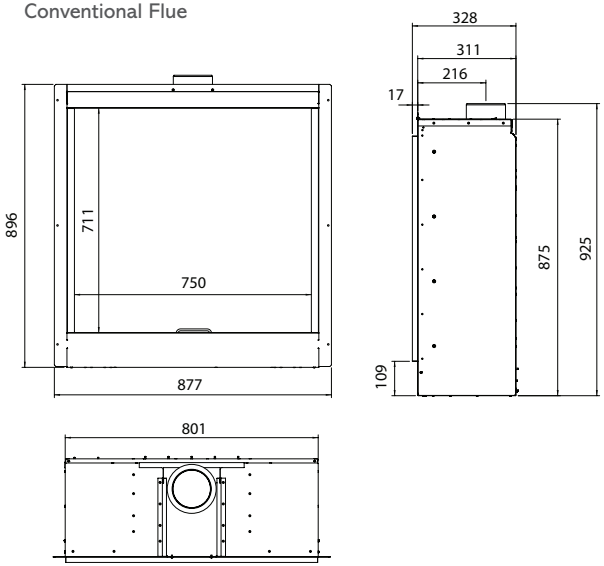

Balanced Flue

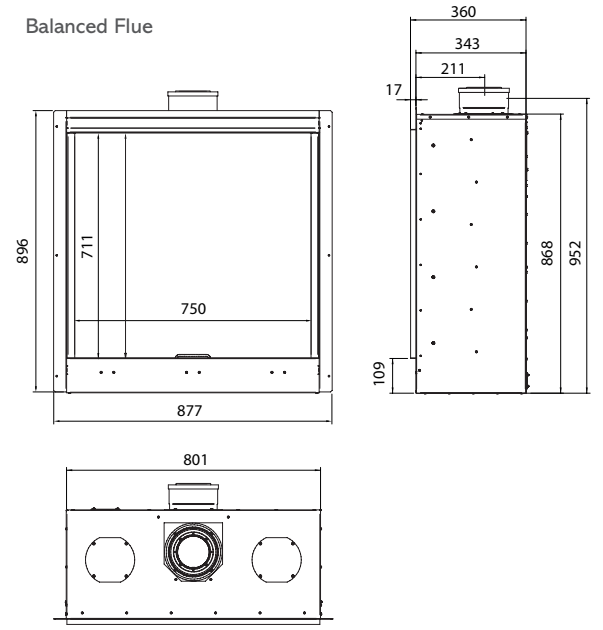

Stone Mantels

STONE MANTEL INFORMATION

Product Code	Description	Frame Finish	w	h	d
9002CLWM	Claremont (requires slip set)	Antique White Marble	1555	1143	190
9002CLTL	Claremont (requires slip set)	Limestone	1555	1143	190
9000CAWM	Cavendish Bolection (requires slip set)	Antique White Marble	1460	1320	207
9000CATL	Cavendish Bolection (requires slip set)	Limestone	1460	1320	207
9001GEWM	Georgian Roundel (requires slip set)	Antique White Marble	1460	1082	200
9001GETL	Georgian Roundel (requires slip set)	Limestone	1460	1082	200
9003GRWM	Grafton (requires slip set)	Antique White Marble	1415	1165	105
9003GRTL	Grafton (requires slip set)	Limestone	1415	1165	105
9004VIWM	Victorian Corbel (requires slip set)	Antique White Marble	1525	1170	250
9004VITL	Victorian Corbel (requires slip set)	Limestone	1525	1170	250
9005SAWM	Sandringham (requires slip set)	Antique White Marble	1550	1220	227
9005SATL	Sandringham (requires slip set)	Limestone	1550	1220	227

HEARTH INFORMATION

934-241	Small Hearth for Stone Mantel	Antique White Marble	1524	53	228
934-193	Small Hearth for Stone Mantel	Limestone	1524	53	228
934-489	Large Hearth for Stone Mantel	Antique White Marble	1625	53	457
934-351	Large Hearth for Stone Mantel	Limestone	1625	53	457

RIVA2 600HL SLIP SETS INFORMATION

934-804	Slip set for Riva2 600HL Stone Mantel	Antique White Marble	N/A	N/A	N/A
934-783	Slip set for Riva2 600HL Stone Mantel	Limestone	N/A	N/A	N/A

RIVA2 750HL SLIP SETS INFORMATION

934-790	Slip set for Riva2 750HL Stone Mantel	Antique White Marble	N/A	N/A	N/A
934-121	Slip set for Riva2 750HL Stone Mantel	Limestone	N/A	N/A	N/A

SMALL & LARGE STONE HEARTHS

Gazco's selection of beautiful stone hearths include either small or large sizes in both Antique White Marble and Limestone options. The large size is styled with a stepped edge design whilst the small has a flush finish.

Small Hearth

Large Hearth

Balanced Flue Options

Gazco offers a comprehensive range of balanced flue system components. Please refer to our dedicated Concentric Flue System brochure which can be requested from your retailer or viewed online at **www.gazco.com.**

Vertical from the top of the appliance then horizontally out

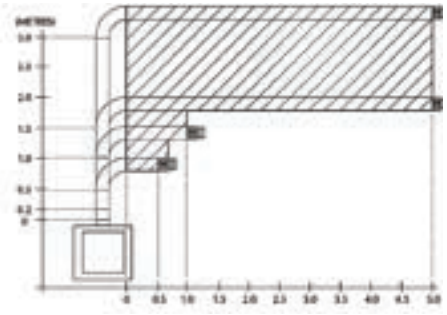

Riva2 500

Vertical from the top of the appliance then horizontally out

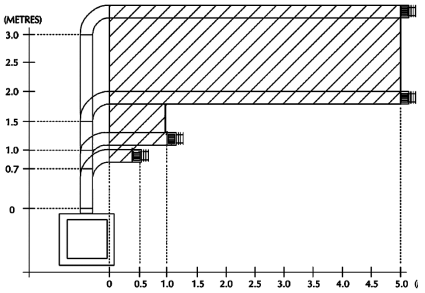

Riva2 750HL Nat Gas & LPG

Vertical from the top of the appliance

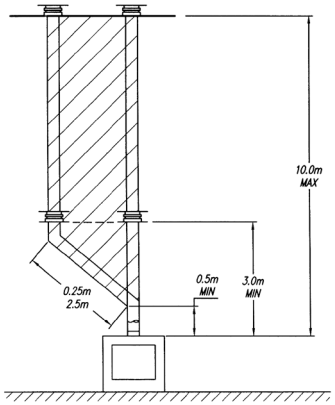

Riva2 500 Evoke Glass with White Glass front and Brick-effect lining

The above information is to assist you in your choice of a suitable Gazco fire. This is not intended to be all the information required to install your fire. This can be obtained from your local Gazco retailer or you can download the full installation instructions from the Gazco website at **www.gazco.com**

Chimney Renovation Kit For Riva2 500 & 750HL

This innovative addition allows your balanced flue Riva2 500 or 750HL fire to be installed in an existing fireplace opening with the option of either a single liner using the masonry chimney to bring in air or with two liners. Your retailer will be able to advise on your specific requirements.

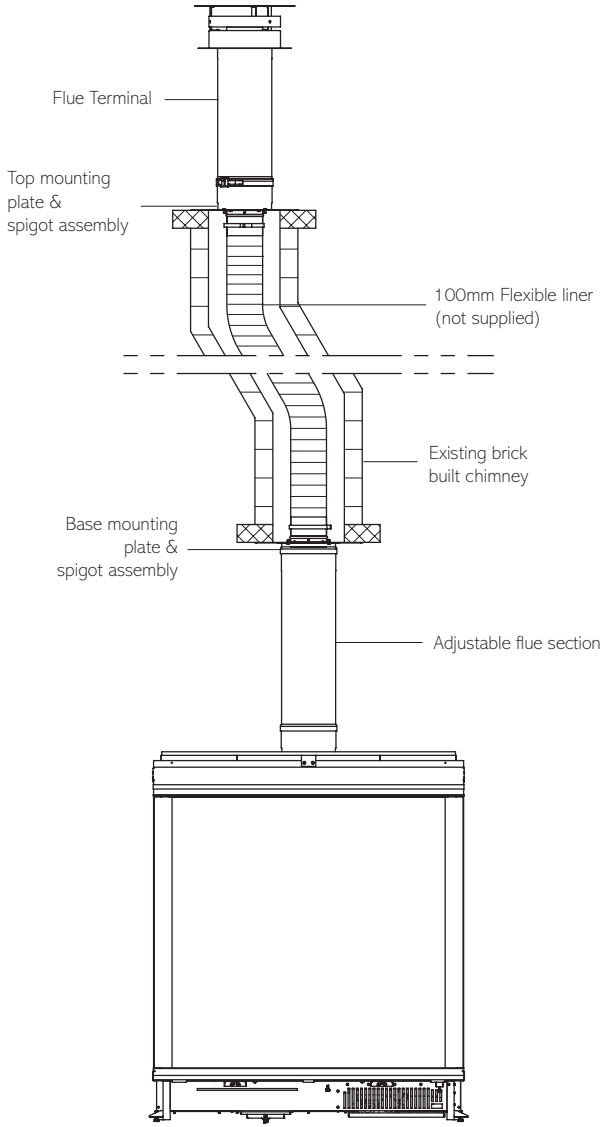

WIN the cost of your product back!*

For further home inspiration you can **view real life installations** at our Customer Showcase page and share your thoughts and photos of your new stove or fire installation to enter our draw!

- We will publish your entry on our Customer Showcase
- You will be entered into a draw for the chance to win the cost of your product back
- **Gain a second entry** by registering your product online for your free extended warranty at **gazco.com/registration**

"It creates a fabulous cosy feel in the winter"

"Amazing, beats all our expectations"

"So pleased we chose this gas alternative to a log burning stove"

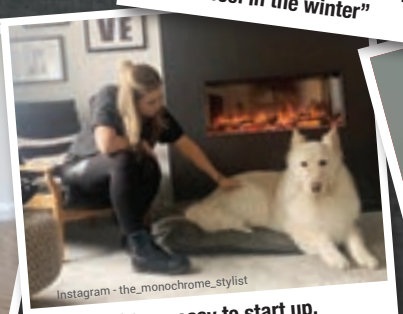

"It's so easy to start up, with a press of a button!"

"Looks Amazing"

View real life installations and submit your review at

gazco.com/customershowcase

* Terms and conditions apply. See online for details

 Riva2 600 Designio2 Glass with EchoFlame Black Glass lining

Important Information

Technical Specifications

All specifications given in this brochure are approximate. Actual specifications for each individual product will vary according to model. Your Gazco retailer will be pleased to provide any further information you require. Alternatively you may view or download specification sheets from **www.gazco.com**

Installation and Safety

Gazco gas fires must be fitted by a qualified gas installer (Gas Safe registered in the United Kingdom or RGII registered in the Republic of Ireland) who should also verify the proposed site conditions are fully suitable for the product selected. Complete installation instructions for many models can be obtained prior to purchase by viewing or downloading them from **www.gazco.com**. Please note that all parts of these fires, particularly the glass panel in the door, become extremely hot during operation and can result in serious injury and burns if touched. It is therefore recommended that a fireguard complying with BS 8423:2002 is used in the presence of young children, the elderly or infirm.

Colours/Flame pictures

Owing to variations in studio lighting and printing inks, the finishes/colours of fires illustrated in this brochure may differ slightly from actual models. Before purchasing, please ask your retailer to show you finish/colour samples. Whilst all the flame pictures shown in this brochure are of actual fires, flame pictures may vary depending on the installation, flue conditions and geographical/surrounding features that may effect the efficiency of the flue.

Care and maintenance

Traditional materials, such as polished steel and brass, tarnish on contact with air, especially when also exposed to heat. To help minimise this effect, we recommend fires receive regular treatment with suitable proprietory cleaners. Additionally, please remember that gas fires will require servicing annually by a qualified gas installer Gas Safe registered in the United Kingdom or Bord Gáis registered in the Republic of Ireland).

Warranty and Product Improvement

Your Gazco Expert Retailer will provide you with a Two Year Warranty for your new gas fire. This can be extended to a Five Year Warranty provided your fire has been registered with Gazco. The second and subsequent years are dependant on the appliance being serviced 12 months after installation and annually thereafter and exclude certain consumable parts. Fires purchased outside of Gazco's Expert Retailer Network will carry a standard 1 Year Non-Extendable Warranty.
Full warranty terms and conditions are available to view at **www.gazco.com.**

Gazco pursue a policy of continuous product improvement, therefore, whilst our products are correct at the time of the photography, we reserve the right to make alterations and amendments. Exact product details should be discussed with your retailer at the time of purchase.

Air Ventilation for Gas Fires

To comply with gas appliance installation regulations, the Riva2 750HL conventional flue requires additional ventilation into your room. For further information, please consult either your Gazco retailer or the Gazco Technical Information on our website **www.gazco.com** to confirm the ventilation required. All other fires featured in this brochure do not require additional ventilation.

Gazco gratefully acknowledges the assistance of the following companies with photographic settings:

Furnishings and Ornaments:- www.amara.com; www.cultfurniture.com; www.furniturevillage.co.uk; www.johnlewis.com; www.lauraashley.com; www.theorangetree.co.uk; www.habitat.co.uk; www.houseoffraser.co.uk; www.loaf.com; www.sofarooms.co.uk; www.tomraffield.com; www.nkuku.com; www.ashorejewellery.co.uk; www.eclectique.co.uk; www.debenhams.com; www.next.co.uk; www.mokodirect.co.uk; www.marksandspencer.com; www.rockettstgeorge.co.uk; www.birlea.com; www.frenchconnection.com; www.wayfair.co.uk; www.urbanoutfitters.com/uk; www.tkmaxx.com; www.homesense.com; www.next.co.uk; www.coxandcox.co.uk; www.urbanara.co.uk; www.amtico.com; www.lpdfurniture.co.uk; www.opiesuk.co.uk; www.graceandgloryhome.co.uk; www.chunkymonkeyfurniture.co.uk; www.desenio.co.uk • **Lighting:-** www.amoslighting.co.uk • **Wood Mantels:-** www.stovax.com **Stone Mantels:-** www.farmington.co.uk; www.bnsp.co.uk; www.grandisson.com; www.rudloe-stone.com **Wood flooring:-** www.beechbros.co.uk • **Tiles & Stone floors:-** www.originalstyle.com; www.wallsandfloors.co.uk • **Plants:-** www.stbridgetnurseries.co.uk; www.urbanandruralplants.co.uk

Gazco Limited, Osprey Road, Sowton Industrial Estate,
Exeter, Devon, England EX2 7JG
Tel: 01392 261900 • **Email:** info@gazco.com
Export Sales: 00 44 1392 261990

gazco.com

Find Your Retailer

You can find your nearest retailer by visiting:
www.gazco.com/find-a-retailer

Your Gazco stockist:

£3.00

Brochure ref: GAZC 1120

Paper sourced from sustainable forests and printed using vegetable based inks

© All material copyright Gazco Limited 2020 I E & O E
A member of the Stovax Group

Riva2 750HL Edge with Brick-effect lining and Claremont Mantel and slip sets Antique White Marble